THIRD ANGLE PROJECTION | No. REQ'D | A3 | DRAWING No.

LINE SYMBOLS

SYMBOLS	NAME
	PIPE LINE
	CAPILLARY TUBING
	ELECTRIC SIGNAL
	SOFTWARE LINK
	PRESSURE LEAD
	DUCT

PIPING VALVE SYMBOLS

SYMBOLS	NAME
	GATE VALVE (NOR.CLOSED)
	GLOBE VALVE (NOR.CLOSED)
	BALL VALVE (NOR.CLOSED)
	BUTTERFLY VALVE (NOR.CLOSED)
	DIAPHRAGM VALVE (NOR.CLOSED)
	PINCH VALVE (NOR.CLOSED)
	NEEDLE VALVE (NOR.CLOSED)
	CHECK VALVE
	CHECK VALVE (WAFER)
	PRESSURE RELIEF VALVE

INSTRUMENT VALVE SYMBOLS

SYMBOLS	NAME
	ACTUATED BY AIR
	ACTUATED BY MOTOR
	AIR CONTROL VALVE
	SOLENOID ACTUATOR
	SELF REGURATING VALVE
	SELF REGURATING VALVE

TRENCH SYMBOLS

SYMBOLS	NAME
	TO ABSORBER AREA DRAIN SUMP
	TO GYPSUM AREA DRAIN SUMP
	TO LIMESTONE AREA DRAIN SUMP

SYMBOLS FOR PIPING PARTS & INSTRUMENT PARTS

SYMBOLS	NAME
	STEAM TRAP
	AIR TRAP
	Y-STRAINER
	T-STRAINER
	TEMPORARY STRAINER
	REDUCER
	EXPANSION JOINT
	DUCT EXPANSION JOINT
	FLEXIBLE HOSE
	SPOOL PIECE
	VENT
	HOSE CONNECTION
	BLIND FLANGE
	REDUCING FLANGE
	CAP (BW)
	CAP (SCR)
	TRENCH
	SIGHT GLASS
	SILENCER
	ORIFICE
	DIAPHRAGM
	MAGNETIC FLOW METER
	VORTEX FLOW METER
	PH METER
	FILTER
	MANHOLE
	INSPECTION HOLE
	PITOT TUBE
	SAMPLING POT
	SAMPLING NOZZLE
	RESTRICTION ORIFICE
	ROTAMETER

SYMBOLS FOR VALVE OPERATION

SYMBOLS	NAME
	FAILURE OPEN (THE VALVE OPENS WHEN AIR OR ELECTRICITY FOR ACTUATOR FAILS.)
	FAILURE CLOSE (THE VALVE CLOSES WHEN AIR OR ELECTRICITY FOR ACTUATOR FAILS.)

INSULATION SYMBOLS

SYMBOLS	DESCRIPTION
H10	THERMAL INSULATION (100°C & LOWER)
H15	THERMAL INSULATION (101°C ~ 150°C)
H20	THERMAL INSULATION (151°C ~ 200°C)
H25	THERMAL INSULATION (201°C ~ 250°C)
H30	THERMAL INSULATION (251°C ~ 300°C)
H35	THERMAL INSULATION (301°C ~ 350°C)
HF	INSULATION FOR ANTI FREEZING
ET	ELECTRIC TRACE
ST	STEAM TRACE (LOW PRESSURE STEAM)
P10	PERSONAL PROTECTION (100°C & LOWER)
P15	PERSONAL PROTECTION (101°C ~ 150°C)
P20	PERSONAL PROTECTION (151°C ~ 200°C)
P25	PERSONAL PROTECTION (201°C ~ 250°C)
P30	PERSONAL PROTECTION (251°C ~ 300°C)
P35	PERSONAL PROTECTION (350°C ~ 400°C)

DELIVERY LIMITS

SYMBOLS	NAME
	BETWEEN CLIENT AND CONTRACTOR
CONTRACTOR XXX	BETWEEN SUB CONTRACTOR AND VENDOR

SYSTEM

NUMBER	NAME
1	FLUE GAS SYSTEM
2	SO_2 ABSORPTION OXIDATION SYSTEM
3	REHEATING SYSTEM
4	GYPSUM DEWATERING HANDLING SYSTEM
5	LIMESTONE PREPARATION SYSTEM
6	BLANK
7	SUMP SYSTEM
8	UTILITY SYSTEM

FLUID NAME

FLUID SYMBOL	FLUID NAME	FLUID SYMBOL	FLUID NAME
AA	ANTIFOAM AGENT	WCS	COOLING WATER SUPPLY
AC	COMPRESSED AIR	WCR	COOLING WATER RETURN
AF	FLUIDIZER AIR		
AI	INSTRUMENT AIR	WP	PROCESS WATER
AO	OXIDATION AIR	WR	RAW WATER
AS	SEAL AIR	WW	WASTE WATER
DD	DUCT DRAIN	VG	VACUUM PUMP VENT
FS	FILTRATE SLURRY	VBG	BELT FILTER VENT GAS
GS	GYPSUM SLURRY	LD	LIMESTONE DEDUSTING
LS	LIMESTONE SLURRY	LOL	LUBE OIL (LOW PRESSURE)
		LOH	LUBE OIL (HIGH PRESSURE)

SERVICE CLASS

SERVICE CLASS	MATERIAL	FLUID SYMBOL
AA40	IIR RUBBER LINED PIPING	LS, WP, WC
AA60	IIR RUBBER LINED PIPING	GS,FS,WW,DD
BA01	Gr.304 STAINLESS STEEL / GI PIPING	AI, LOL
BA02	Gr.304 STAINLESS STEEL / GI PIPING	LOH
BA03	Gr.316L STAINLESS STEEL PIPING	WP, AO
CA01	CARBON STEEL GENERAL PIPING	AS,AO,AC,AF,LD
CC01	CARBON STEEL PRESSURE PIPING	WP,WR,WCS,WCR, VG, AA

UNIT CODE

SYMBOLS	UNIT IDENTIFICATION
00	COMMON
10	UNIT-1 FGD SYSTEM AND AUXILIARIES

EXPRESSION OF PIPING LINE

10 - 200 - GS - 2 00 1 - AA60 - HF

- 10: UNIT CODE
- 200: NOMINAL PIPE SIZE (mm)
- GS: FLUID SYMBOL
- 2: SYSTEM NUMBER
- 00: SERIAL NUMBER
- 1: SUFFIX NUMBER
- AA60: PIPING SERVICE CLASS
- HF: INSULATION CLASS

REVISIONS

No.	DATE	DESCRIPTION	REFERENCE NO.	SECTION	APP'D	PROJECT TEAM	APP'D

MITSUBISHI HITACHI POWER SYSTEMS, LTD.
CONFIDENTIAL & PROPRIETARY INFORMATION
TECHNICAL INFORMATION AND TRADE SECRETS IN THIS DRAWING OR DOCUMENT ARE THE PROPERTY OF MITSUBISHI HITACHI POWER SYSTEMS, LTD. (MHPS) AND ARE NOT TO BE DISCLOSED, REPRODUCED OR COPIED IN WHOLE OR IN PART, OR USED FOR THE BENEFIT OF ANYONE OTHER THAN MHPS WITHOUT MHPS'S PRIOR WRITTEN CONSENT.
THIS DOCUMENT OR DRAWING IS PROTECTED BY COPYRIGHT LAW, UNFAIR COMPETITION LAW, CIVIL LAW AND INTERNATIONAL TREATY PROVISIONS, AND ANY APPLICABLE LAWS OF JAPAN AND THE COUNTRY IN WHICH IT IS BEING USED.

ORDER No.
PROJECT TEAM
APPROVED
SECTION
APPROVED
DWN. DATE
SCALE

CUSTOMER: MAHAGENCO

PROJECT: BHUSAWAL 1X660 MW

PROCESS P&I DIAGRAM
SYMBOL MARK (1/2)

DWG. No. B240-00001 REV. 1

MITSUBISHI HITACHI POWER SYSTEMS, LTD.
AIR QUALITY CONTROL SYSTEMS TECHNOLOGY DIVISION

THIRD ANGLE PROJECTION | No. REQ'D | A3 | DRAWING No.

INSTRUMENT ABBREVIATION

	FIRST–LETTER		SUCCEEDING–LETTERS		
	MEASURED OR INITIATING VARIABLE	MODIFIER	READOUT OR PASSIVE FUNCTION	OUTPUT FUNCTION	MODIFIER
A	ANALYSIS		ALARM		
B	BURNER, COMBUSTION		BLANK	BLANK	BLANK
C	BLANK			CONTROL	
D	BLANK	DIFFERENTIAL			
E	VOLTAGE		SENSOR (PRIMARY ELEMENT)		
F	FLOW RATE	RATIO (FRACTION)			
G	BLANK		GLASS, VIEWING DEVICE		
H	HAND				HIGH
I	CURRENT (ELECTRICAL)		INDICATE		
J	POWER	SCAN			
K	TIME, TIME SCHEDULE	TIME RATE OF CHANGE		CONTROL STATION	
L	LEVEL		LIGHT		LOW
M	BLANK	MOMENTARY			MIDDLE, INTERMEDIATE
N	BLANK		BLANK	BLANK	BLANK
O	BLANK		ORIFICE, RESTRICTION		
P	PRESSURE, VACUUM		POINT(TEST) CONNECTION		
Q	QUANTITY	INTEGRATE, TOTALIZE			
R	RADIATION		RECORD		
S	SPEED, FREQUENCY	SAFETY		SWITCH	
T	TEMPERATURE			TRANSMIT	
U	MULTIVARIABLE		MULTIFUNCTION	MULTIFUNCTION	MULTIFUNCTION
V	VIBRATION, MECHANICAL ANALYSIS			VALVE, DAMPER, LOUVER	
W	WEIGHT, FORCE		WELL		
X	UNCLASSIFIED	X AXIS	UNCLASSIFIED	UNCLASSIFIED	UNCLASSIFIED
Y	EVENT, STATE OR PRESENCE	Y AXIS		RELAY, COMPUTE, CONVERT	
Z	POSITION, DIMENSION	Z AXIS		DRIVER, ACTUATOR, UNCLASSIFIED FINAL CONTROL ELEMENT	

INSTRUMENT SYMBOLS

SYMBOLS	NAME
	FIELD MOUNTED
	FOR CONTROL ROOM
	FOR LOCAL CONTROL PANEL
	FOR DCS
I	INTERLOCK LOGIC

PNEUMATIC VALVE ACTUATOR

CODE NO.	ACTUATION
FLXXWA–D	DOUBLE SOLENOID NO LIMIT SWITCH
FLXXWA–DL	DOUBLE SOLENOID WITH LIMIT SWITCH
FLXXWA–S	SINGLE SOLENOID NO LIMIT SWITH
FLXXWA–SL	SINGLE SOLENOID WITH LIMIT SWITCH

MACHINARY SYMBOLS

SYMBOLS	NAME
	PUMP
	FAN / BLOWER
	AGITATOR (FLAT BLADE)
	AGITATOR (PROPELLOR)
	ROTARY VALVE
	CRUSHER
	BELT FEEDER
	BELT FILTER
	BALL MILL
	CYCLONE
	MIST ELIMINATOR

EQUIPMENT SYMBOLS

SYMBOLS	NAME
	BAG FILTER
	SILO
	SLIDE GATE
	TANDEM LOUVER DAMPER (MULTIVANE)
	SINGLE STAGE LOUVER DAMPER (MULTIVANE)
	LOUVER DAMPER (SINGLE VANE)
	DISTRIBUTION BOX (3WAY)
	DISTRIBUTION BOX (2WAY)
	SUMP
	HEAT EXCHANGER
	SHELL AND TUBE HEAT EXCHANGER
	AIR DRYER
	FILTER
	SPRAY NOZZLE

DRIVER SYMBOLS

SYMBOLS	NAME
A	AIR MOTOR
M	ELECTRIC MOTOR

OTHER SYMBOLS

SYMBOLS	NAME
	INSERT PIPE / LANCE
	CHUTE
	TRUCK

MITSUBISHI HITACHI POWER SYSTEMS, LTD.
CONFIDENTIAL & PROPRIETARY INFORMATION

TECHNICAL INFORMATION AND TRADE SECRETS IN THIS DRAWING OR DOCUMENT ARE THE PROPERTY OF MITSUBISHI HITACHI POWER SYSTEMS, LTD. (MHPS) AND ARE NOT TO BE DISCLOSED, REPRODUCED OR COPIED IN WHOLE OR IN PART, OR USED FOR THE BENEFIT OF ANYONE OTHER THAN MHPS WITHOUT MHPS'S PRIOR WRITTEN CONSENT.
THIS DOCUMENT OR DRAWING IS PROTECTED BY COPYRIGHT LAW, UNFAIR COMPETITION LAW, CIVIL LAW AND INTERNATIONAL TREATY PROVISIONS, AND ANY APPLICABLE LAWS OF JAPAN AND THE COUNTRY IN WHICH IT IS BEING USED.

REVISIONS

No.	DATE	DESCRIPTION	REFERENCE NO.	SECTION	APP'D	PROJECT TEAM	APP'D

ORDER No.

PROJECT TEAM

APPROVED

SECTION

APPROVED

DWN. DATE | SCALE

CUSTOMER: MAHAGENCO

PROJECT: BHUSAWAL 1X660 MW

PROCESS P&I DIAGRAM
SYMBOL MARK (2/2)

DWG. No. B240–00002 | REV. 1

MITSUBISHI HITACHI POWER SYSTEMS, LTD.
AIR QUALITY CONTROL SYSTEMS TECHNOLOGY DIVISION

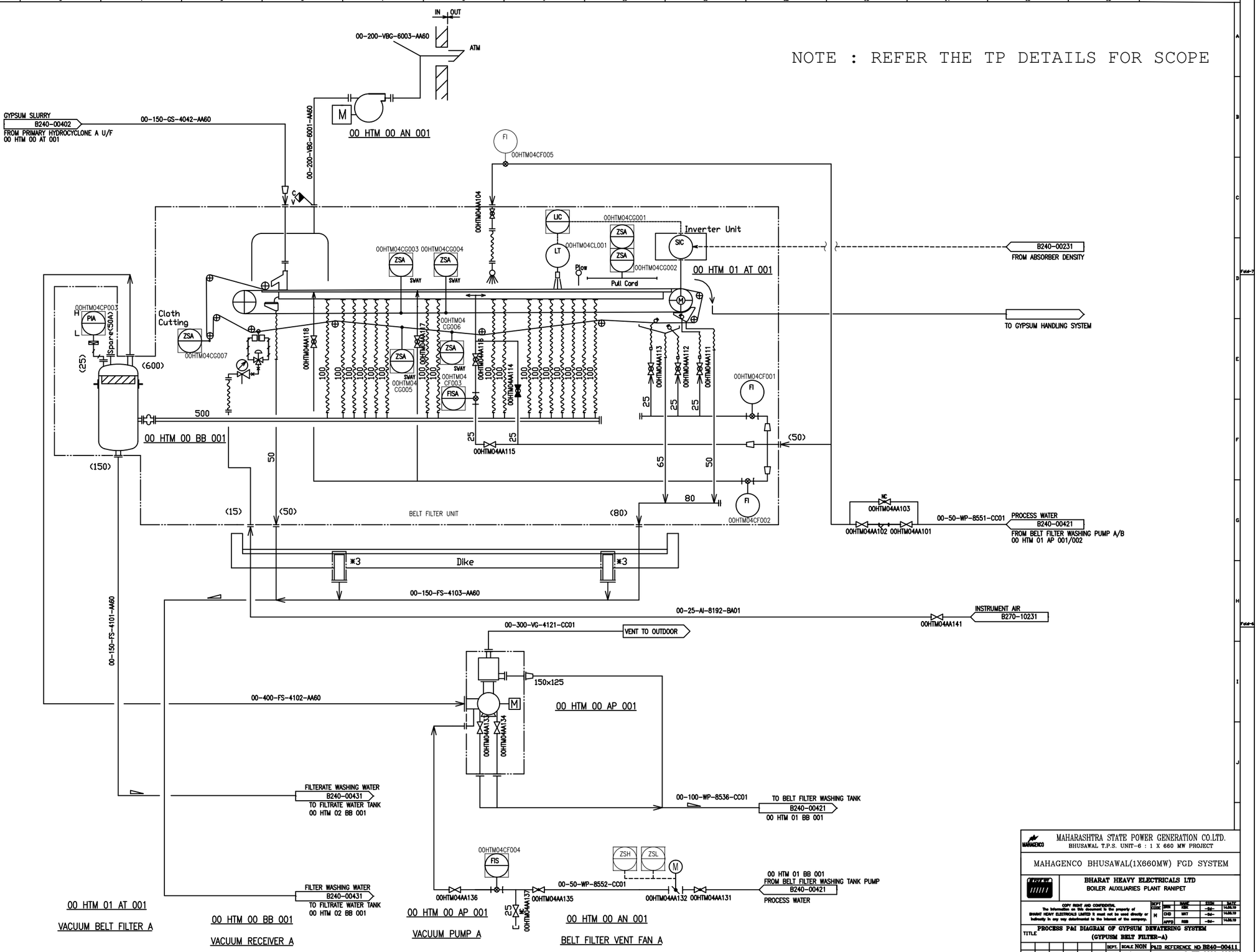

MAHARASHTRA STATE POWER GENERATION CO.LTD.
BHUSAWAL T.P.S. UNIT-6 : 1 X 660 MW PROJECT

MAHAGENCO BHUSAWAL(1X660MW) FGD SYSTEM

BHARAT HEAVY ELECTRICALS LTD
BOILER AUXILIARIES PLANT RANIPET

COPY RIGHT AND CONFIDENTIAL
The information on this document is the property of BHARAT HEAVY ELECTRICALS LIMITED It must not be used directly or indirectly in any way detrimental to the interest of the company.

DEPT CODE		NAME	SIGN	DATE
H	DRN	KRK	-Sd-	14.06.19
	CHD	MKT	-Sd-	14.06.19
	APPD	RSB	-Sd-	14.06.19

TITLE: PROCESS P&I DIAGRAM OF GYPSUM DEWATERING SYSTEM (GYPUSM BELT FILTER-A)

DEPT. SCALE NON
SIGN
PAID REFERENCE NO B240-00411
DRAWING NO S-FH-0000-00857
SHEET 1 OF 6 REV. 01

SIZE-A3

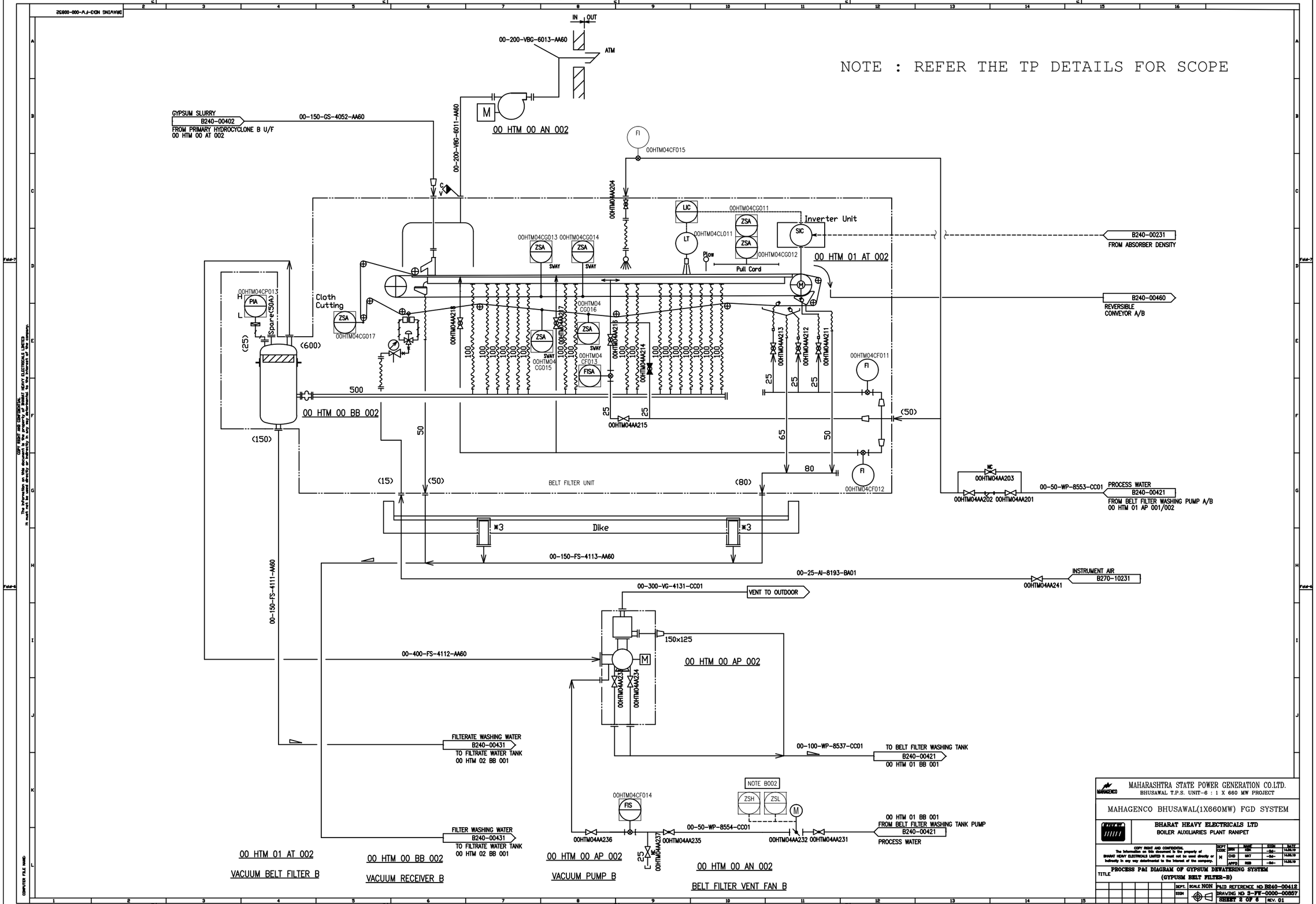
NOTE : REFER THE TP DETAILS FOR SCOPE
IN
OUT
ATM
00-200-VBG-6013-AA60
00 HTM 00 AN 002
GYPSUM SLURRY
B240-00402
FROM PRIMARY HYDROCYCLONE B U/F
00 HTM 00 AT 002
00-150-GS-4052-AA60
00-200-VBG-6011-AA60
00HTM04CF015
00HTM04AA204
LIC
00HTM04CG011
ZSA
Inverter Unit
SIC
LT
00HTM04CL011
00HTM04CG012
Plow
Pull Cord
00 HTM 01 AT 002
B240-00231
FROM ABSORBER DENSITY
B240-00460
REVERSIBLE
CONVEYOR A/B
00HTM04CG013
00HTM04CG014
SWAY
00HTM04CP013
PIA
Spare(50A)
Cloth
Cutting
00HTM04CG017
00HTM04AA218
00HTM04CG016
00HTM04CG015
00HTM04CF013
FISA
00HTM04AA216
00HTM04AA214
00HTM04AA213
00HTM04AA212
00HTM04AA211
00HTM04CF011
(25)
(600)
500
00 HTM 00 BB 002
(150)
00HTM04AA215
(50)
65
50
80
00HTM04CF012
(15)
BELT FILTER UNIT
(80)
NC
00HTM04AA203
00HTM04AA202
00HTM04AA201
00-50-WP-8553-CC01
PROCESS WATER
B240-00421
FROM BELT FILTER WASHING PUMP A/B
00 HTM 01 AP 001/002
*3
Dike
00-150-FS-4113-AA60
00-150-FS-4111-AA60
00-25-AI-8193-BA01
INSTRUMENT AIR
B270-10231
00HTM04AA241
00-300-VG-4131-CC01
VENT TO OUTDOOR
150×125
00-400-FS-4112-AA60
00 HTM 00 AP 002
00HTM04AA234
00HTM04AA233
FILTERATE WASHING WATER
B240-00431
TO FILTRATE WATER TANK
00 HTM 02 BB 001
00-100-WP-8537-CC01
TO BELT FILTER WASHING TANK
B240-00421
00 HTM 01 BB 001
NOTE B002
ZSH
ZSL
00HTM04CF014
FIS
00-50-WP-8554-CC01
00 HTM 01 BB 001
FROM BELT FILTER WASHING TANK PUMP
B240-00421
PROCESS WATER
00HTM04AA236
00HTM04AA235
00HTM04AA237
00HTM04AA232
00HTM04AA231
FILTER WASHING WATER
B240-00431
TO FILTRATE WATER TANK
00 HTM 02 BB 001
00 HTM 01 AT 002
VACUUM BELT FILTER B
00 HTM 00 BB 002
VACUUM RECEIVER B
00 HTM 00 AP 002
VACUUM PUMP B
00 HTM 00 AN 002
BELT FILTER VENT FAN B
FIRST ANGLE PROJECTION
ALL DIMENSIONS ARE IN MM
DRAWING NO:3-FW-0000-00852
COPY RIGHT AND CONFIDENTIAL
The information on this document is the property of BHARAT HEAVY ELECTRICALS LIMITED It must not be used directly or indirectly in any way detrimental to the interest of the company.
COMPUTER FILE NAME
MAHARASHTRA STATE POWER GENERATION CO.LTD.
BHUSAWAL T.P.S. UNIT-6 : 1 X 660 MW PROJECT
MAHAGENCO BHUSAWAL(1X660MW) FGD SYSTEM
BHARAT HEAVY ELECTRICALS LTD
BOILER AUXILIARIES PLANT RANIPET
DEPT CODE
DRN
CHD
APPD
NAME
SIGN
DATE
14.05.19
TITLE
PROCESS P&I DIAGRAM OF GYPSUM DEWATERING SYSTEM
(GYPUSM BELT FILTER-B)
SCALE NON
P&ID REFERENCE NO B240-00412
DRAWING NO 3-FW-0000-00857
SHEET 2 OF 6
REV. 01
SIZE-A3

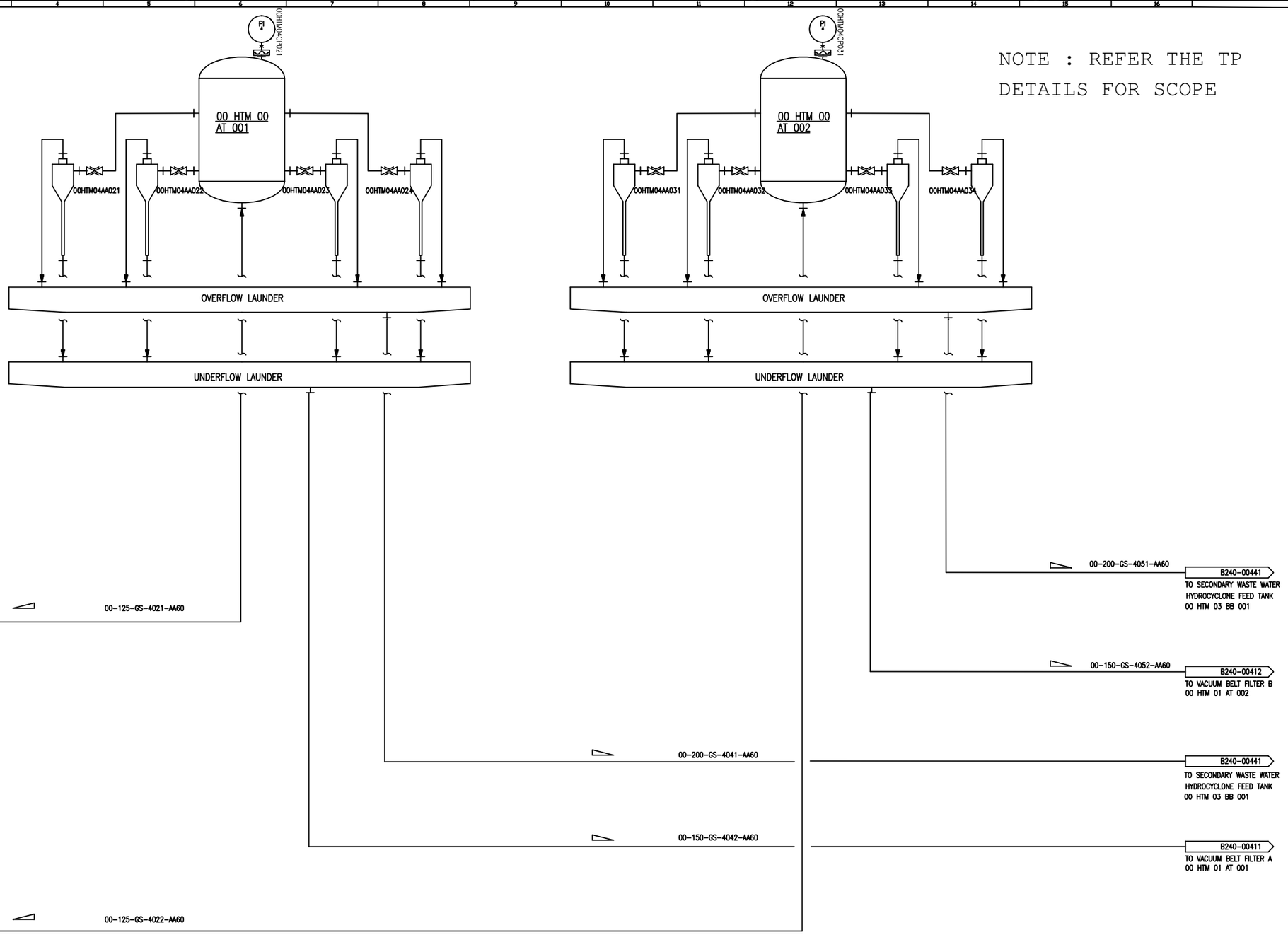

00 HTM 00 AT 001/002

PRIMARY HYDROCYCLONE A/B

MAHARASHTRA STATE POWER GENERATION CO.LTD.
BHUSAWAL T.P.S. UNIT-6 : 1 X 660 MW PROJECT

MAHAGENCO BHUSAWAL(1X660MW) FGD SYSTEM

BHARAT HEAVY ELECTRICALS LTD
BOILER AUXILIARIES PLANT RANIPET

COPY RIGHT AND CONFIDENTIAL
The information on this document is the property of BHARAT HEAVY ELECTRICALS LIMITED It must not be used directly or indirectly in any way detrimental to the interest of the company.

DEPT CODE		NAME	SIGN	DATE
H	DRN	KRK	-Sd-	14.06.19
	CHD	MKT	-Sd-	14.06.19
	APPD	RSB	-Sd-	14.06.19

TITLE PROCESS P&I DIAGRAM OF GYPSUM DEWATERING SYSTEM
(PRIMARY HYDRO-CYCLONE)

DEPT. SCALE NON P&ID REFERENCE NO B240-00402
SIGN DRAWING NO 3-FW-0000-00857
SHEET 3 OF 6 REV. 01

SIZE-A3

DRAWING NO:3-FW-000-00852

COMPUTER FILE NAME

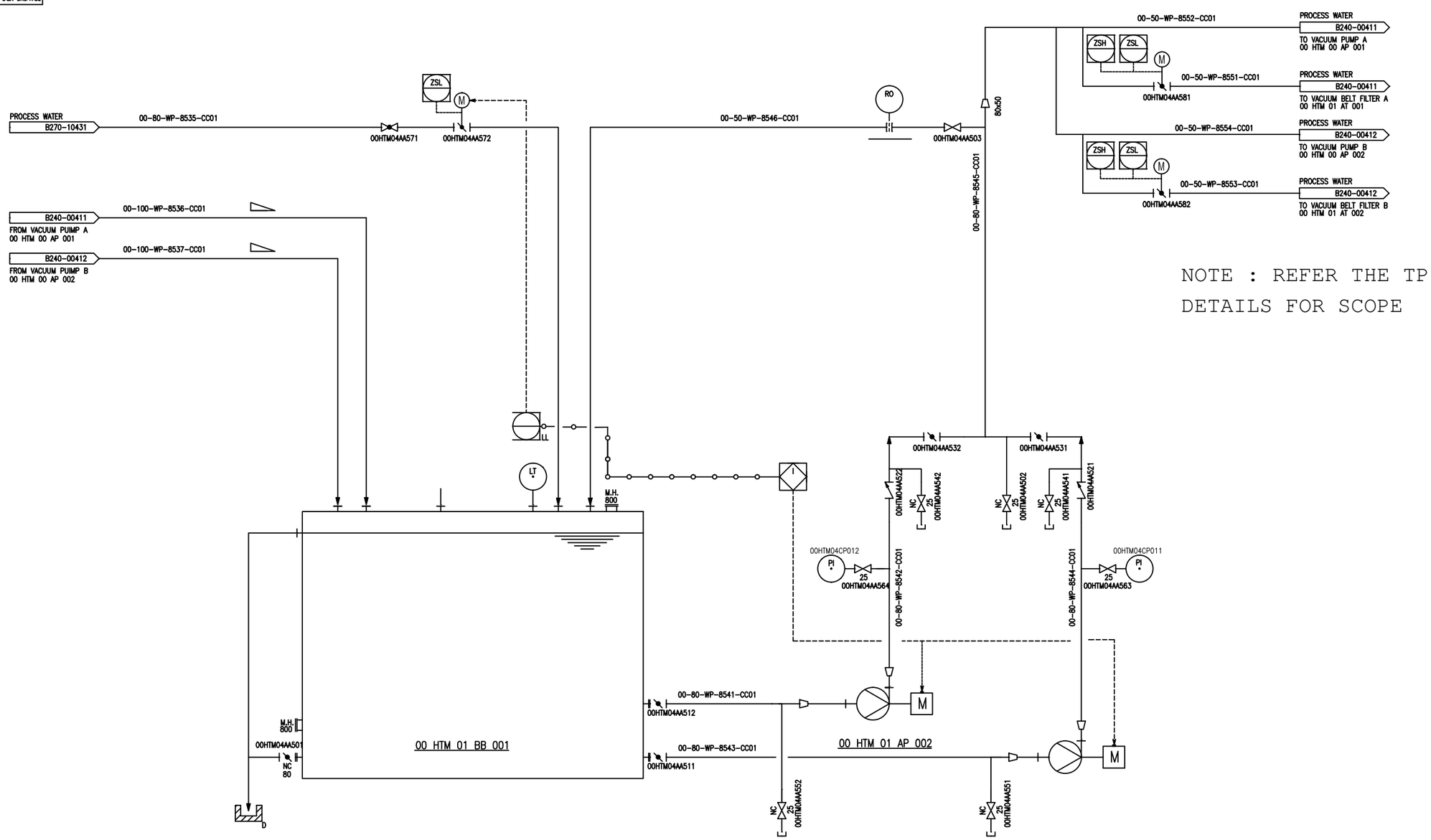

NOTE : REFER THE TP DETAILS FOR SCOPE

00 HTM 01 BB 001

BELT FILTER WASHING TANK

00 HTM 01 AP 001/002

BELT FILTER WASHING PUMP A/B

MAHARASHTRA STATE POWER GENERATION CO.LTD.
BHUSAWAL T.P.S. UNIT-6 : 1 X 660 MW PROJECT

MAHAGENCO BHUSAWAL(1X660MW) FGD SYSTEM

BHARAT HEAVY ELECTRICALS LTD
BOILER AUXILIARIES PLANT RANIPET

COPY RIGHT AND CONFIDENTIAL
The information on this document is the property of BHARAT HEAVY ELECTRICALS LIMITED It must not be used directly or indirectly in any way detrimental to the interest of the company.

DEPT CODE		NAME	SIGN	DATE
M	DRN	KBK	-Sd-	14.08.19
	CHD	MKT	-Sd-	14.08.19
	APPD	RSB	-Sd-	14.08.19

TITLE PROCESS P&I DIAGRAM OF GYPSUM DEWATERING SYSTEM (BELT FILTER WASHING TANK)

DEPT. | SCALE NON | P&ID REFERENCE NO B240-00421
SIGN | DRAWING NO 3-FW-0000-00857
SHEET 4 OF 6 | REV. 01
SIZE-A3

COMPUTER FILE NAME

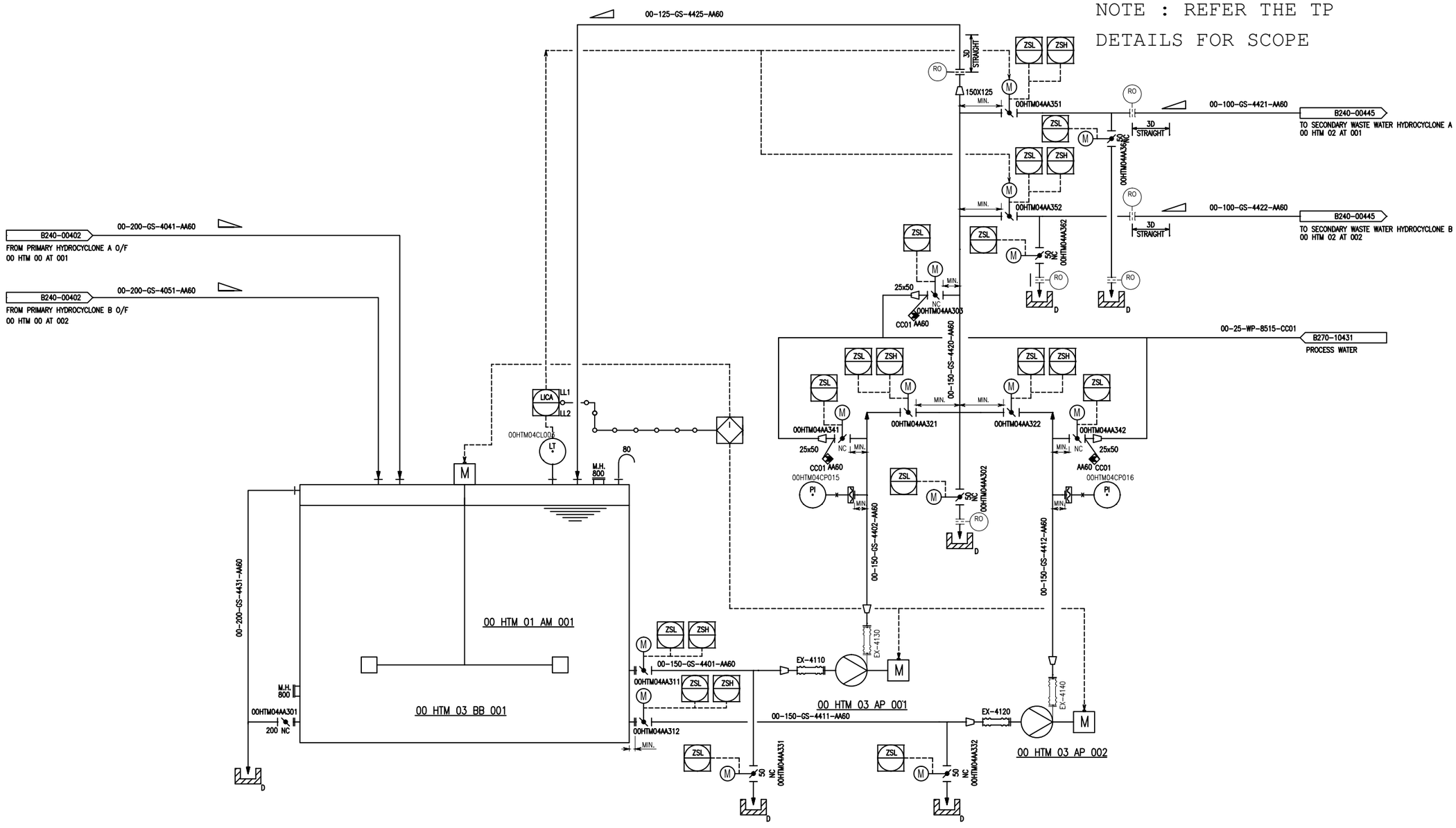

00 HTM 03 BB 001

SECONDARY WASTE WATER
HYDROCYCLONE FEED TANK

00 HTM 01 AM 001

SECONDARY WASTE WATER
HYDROCYCLONE FEED TANK AGITATOR

00 HTM 03 AP 001/002

SECONDARY WASTE WATER
HYDROCYCLONE FEED TANK PUMP A/B

MAHARASHTRA STATE POWER GENERATION CO.LTD.
BHUSAWAL T.P.S. UNIT-6 : 1 X 660 MW PROJECT

MAHAGENCO BHUSAWAL(1X660MW) FGD SYSTEM

BHARAT HEAVY ELECTRICALS LTD
BOILER AUXILIARIES PLANT RANIPET

COPY RIGHT AND CONFIDENTIAL
The information on this document is the property of BHARAT HEAVY ELECTRICALS LIMITED It must not be used directly or indirectly in any way detrimental to the interest of the company.

DEPT CODE		NAME	SIGN	DATE
H	DRN	KBK	-Sd-	14.06.19
	CHD	SKT	-Sd-	14.06.19
	APPD	RSB	-Sd-	14.06.19

TITLE PROCESS P&I DIAGRAM OF GYPSUM DEWATERING SYSTEM (SECONDARY HYDRO CYCLONE FEED TANK)

DEPT. SCALE NON
SIGN
P&ID REFERENCE NO B240-00441
DRAWING NO 3-PF-0000-00857
SHEET 5 OF 6 REV. 01
SIZE-A3

DRAWING NO3-PF-000-00852

FIRST ANGLE PROJECTION

ALL DIMENSIONS ARE IN MM

COMPUTER FILE NAME

FIRST ANGLE PROJECTION

ALL DIMENSIONS ARE IN MM

DRAWING NO:3-FW-0000-00857

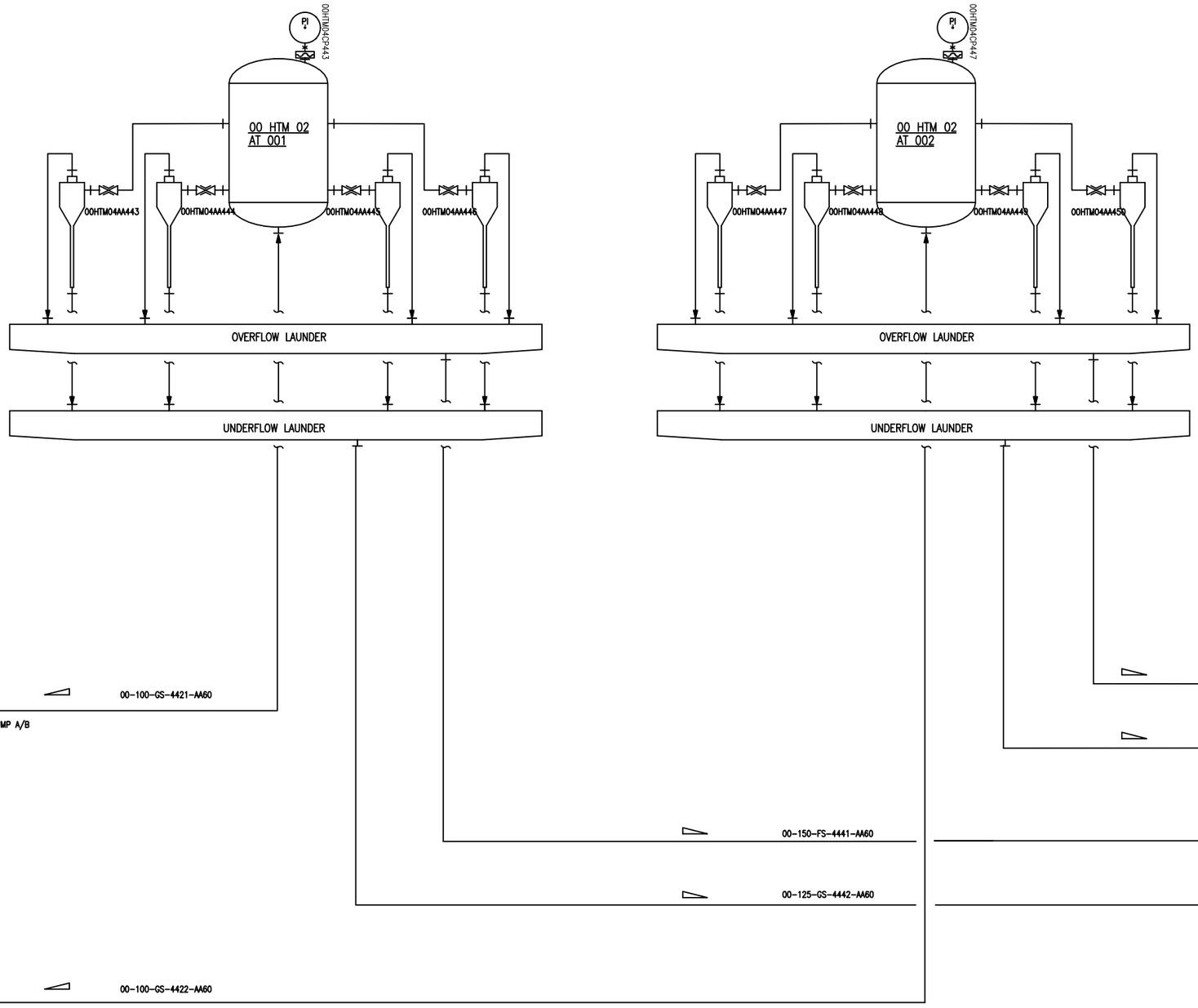

NOTE : REFER THE TP DETAILS FOR SCOPE

00 HTM 02 AT 001/002

SECONDARY
HYDROCYCLONE A/B

MAHARASHTRA STATE POWER GENERATION CO.LTD.
BHUSAWAL T.P.S. UNIT-6 : 1 X 660 MW PROJECT

MAHAGENCO BHUSAWAL(1X660MW) FGD SYSTEM

BHARAT HEAVY ELECTRICALS LTD
BOILER AUXILIARIES PLANT RANIPET

COPY RIGHT AND CONFIDENTIAL
The information on this document is the property of BHARAT HEAVY ELECTRICALS LIMITED It must not be used directly or indirectly in any way detrimental to the interest of the company.

DEPT		NAME	SIGN	DATE
CODE	DRN	KSK	-do-	14.05.19
N	CHD	MKT	-do-	14.05.19
	APPD	RSB	-do-	14.05.19

TITLE PROCESS P&I DIAGRAM OF GYPSUM DEWATERING SYSTEM
(SECONDARY HYDRO-CYCLONE)

DEPT. SCALE NON
SIGN

P&ID REFERENCE NO: B240-00445
DRAWING NO: 3-FW-0000-00857
SHEET 6 OF 6 REV. 01

SIZE-A3

COMPUTER FILE NAME